इंटरनेट मानक

Disclosure to Promote the Right To Information

Whereas the Parliament of India has set out to provide a practical regime of right to information for citizens to secure access to information under the control of public authorities, in order to promote transparency and accountability in the working of every public authority, and whereas the attached publication of the Bureau of Indian Standards is of particular interest to the public, particularly disadvantaged communities and those engaged in the pursuit of education and knowledge, the attached public safety standard is made available to promote the timely dissemination of this information in an accurate manner to the public.

"जानने का अधिकार, जीने का अधिकार"
Mazdoor Kisan Shakti Sangathan
"The Right to Information, The Right to Live"

"पुराने को छोड नये के तरफ"
Jawaharlal Nehru
"Step Out From the Old to the New"

IS/ISO 10816-2 (2001): Mechanical vibration - Evalauation of machine vibration by measurements on non-rotating parts, Part 2: Land-based steam turbines and generators in excess of 50 MW [MED 28: Mechanical Vibration and Shock]

"ज्ञान से एक नये भारत का निर्माण"
Satyanarayan Gangaram Pitroda
"Invent a New India Using Knowledge"

Act Number 22 of 2005
The Indian Parliament
RIGHT TO INFORMATION

Made Available By
Public.Resource.Org

"ज्ञान एक ऐसा खजाना है जो कभी चुराया नहीं जा सकता है"
Bhartṛhari—Nītiśatakam
"Knowledge is such a treasure which cannot be stolen"

BLANK PAGE

BRUTUM FULMEN

IGNORANTIA JURIS NON EXCUSAT

PROTECTED BY COPYRIGHT

भारतीय मानक

यांत्रिक कंपन — अघूर्णी हिस्सों पर मापन द्वारा मशीन के कंपन का मूल्यांकन

भाग 2 भूमि पर भाप की टरबाइन तथा 1 500 च/मि., 1 800 च/मि., 3 000 च/मि. तथा 3 600 च/मि. की सामान्य प्रचालन गति वाले 50 मेगावाट से अधिक के जनरेटर

Indian Standard

MECHANICAL VIBRATION — EVALUATION OF MACHINE VIBRATION BY MEASUREMENTS ON NON-ROTATING PARTS

PART 2 LAND-BASED STEAM TURBINES AND GENERATORS IN EXCESS OF 50 MW WITH NORMAL OPERATING SPEEDS OF 1 500 R/MIN,1 800 R/MIN, 3 000 R/MIN AND 3 600 R/MIN

ICS 17.160; 29.160.40

© BIS 2007

BUREAU OF INDIAN STANDARDS
MANAK BHAVAN, 9 BAHADUR SHAH ZAFAR MARG
NEW DELHI 110002

October 2007 **Price Group 6**

NATIONAL FOREWORD

This Indian Standard (Part 2) which is identical with ISO 10816-2 : 2001 'Mechanical vibration — Evaluation of machine vibration by measurements on non-rotating parts — Part 2: Land-based steam turbines and generators in excess of 50 MW with normal operating speeds of 1 500 r/min, 1 800 r/min, 3 000 r/min and 3 600 r/min' issued by the International Organization for Standardization (ISO) was adopted by the Bureau of Indian Standards on the recommendation of the Mechanical Vibration and Shock Sectional Committee and approval of the Mechanical Engineering Division Council.

This Indian Standard supersedes IS 14817 (Part 2) : 2004 'Mechanical vibration — Evaluation of machine vibration by measurements on non-rotating parts: Part 2 Large land-based steam turbine generator sets in excess of 50 MW'.

The text of ISO Standard has been approved as suitable for publication as an Indian Standard without deviations. Certain conventions are, however, not identical to those used in Indian Standards. Attention is particularly drawn to the following:

a) Wherever the words 'International Standard' appear referring to this standard, they should be read as 'Indian Standard'.

b) Comma (,) has been used as a decimal marker in the International Standards, while in Indian Standards, the current practice is to use a point (.) as the decimal marker.

In this adopted standard, reference appears to certain International Standards for which Indian Standards also exist. The corresponding Indian Standards, which are to be substituted in their respective places, are listed below along with their degree of equivalence for the editions indicated:

International Standard	*Corresponding Indian Standard*	*Degree of Equivalence*
ISO 7919-2 : 2001 Mechanical vibration — Evaluation of machine vibration by measurements on rotating shafts — Part 2: Land-based steam turbines and generators in excess of 50 MW with normal operating speeds of 1 500 r/min, 1 800 r/min, 3 000 r/min and 3 600 r/min	IS/ISO 7919-2 : 2001 Mechanical vibration — Evaluation of machine vibration by measurements on rotating shafts: Part 2 Land-based steam turbines and generators in excess of 50 MW with normal operating speeds of 1 500 r/min, 1 800 r/min, 3 000 r/min and 3 600 r/min	Identical
ISO 10816-1 : 1995 Mechanical vibration — Evaluation of machine vibration by measurements on non-rotating parts — Part 1: General guidelines	IS 14817 (Part 1) : 2000 Mechanical vibration — Evaluation of machine vibration by measurements on non-rotating parts: Part 1 General guidelines	do

For the purpose of deciding whether a particular requirement of this standard is complied with, the final value, observed or calculated, expressing the result of a test or analysis, shall be rounded off in accordance with IS 2 : 1960 'Rules for rounding off numerical values (*revised*)'. The number of significant places retained in the rounded off value should be the same as that of the specified value in this standard.

Indian Standard

MECHANICAL VIBRATION — EVALUATION OF MACHINE VIBRATION BY MEASUREMENTS ON NON-ROTATING PARTS

PART 2 LAND-BASED STEAM TURBINES AND GENERATORS IN EXCESS OF 50 MW WITH NORMAL OPERATING SPEEDS OF 1 500 R/MIN,1 800 R/MIN, 3 000 R/MIN AND 3 600 R/MIN

1 Scope

This part of ISO 10816 gives specific guidance for evaluating the severity of vibration measured on the bearings of steam turbines and generators. Guidelines are presented for *in situ*, broad-band vibration measurements taken in the radial direction on the bearings in terms of:

— vibration under normal steady-state operating conditions;

— vibration during transient operation, including passage through resonant speeds during run up or run down,

— changes in vibration which can occur during normal steady-state operation.

The guidelines also apply to axial vibration measured on thrust bearings.

This part of ISO 10816 is applicable to land-based steam turbines and generators with a normal operating speed of 1 500 r/min, 1 800 r/min, 3 000 r/min or 3 600 r/min, and power outputs greater than 50 MW. It also includes steam turbines and/or generators which are directly coupled to a gas turbine (such as for combined cycle applications). In such cases the criteria of this part of ISO 10816 apply only to the steam turbine and the generator. Evaluation of the gas turbine vibration should be carried out in accordance with ISO 7919-4 and ISO 10816-4.

2 Normative references

The following normative documents contain provisions which, through reference in this text, constitute provisions of this part of ISO 10816. For dated references, subsequent amendments to, or revisions of, any of these publications do not apply. However, parties to agreements based on this part of ISO 10816 are encouraged to investigate the possibility of applying the most recent editions of the normative documents indicated below. For undated references, the latest edition of the normative document referred to applies. Members of ISO and IEC maintain registers of currently valid International Standards.

ISO 7919-2, *Mechanical vibration — Evaluation of machine vibration by measurements on rotating shafts — Part 2: Land-based steam turbines and generators in excess of 50 MW with normal operating speeds of 1 500 r/min, 1 800 r/min, 3 000 r/min and 3 600 r/min*

ISO 10816-1, *Mechanical vibration — Evaluation of machine vibration by measurements on non-rotating parts — Part 1: General guidelines*

3 Measurement procedures

The measurement procedures to be followed and the instrumentation to be used shall be as described in ISO 10816-1.

The measurement system shall be capable of measuring broad-band vibration over a frequency range from 10 Hz to at least 500 Hz. If, however, the instrumentation is also to be used for diagnostic purposes, or monitoring during machine run up, run down or overspeed, a wider frequency range may be necessary. Furthermore, in special cases where significant low-frequency vibration can be transmitted to the machine (e.g. in earthquake regions), it may be necessary to attenuate the low-frequency response of the instrumentation.

The transducers for vibration measurements shall be mounted on a rigid part of the structure such that they provide adequate sensitivity to the dynamic forces of the machine. Typically, this will require measuring in two orthogonal radial directions on each bearing, as shown in Figure 1. Although the transducers may be placed at any angular location on the bearings, vertical and horizontal directions are usually preferred.

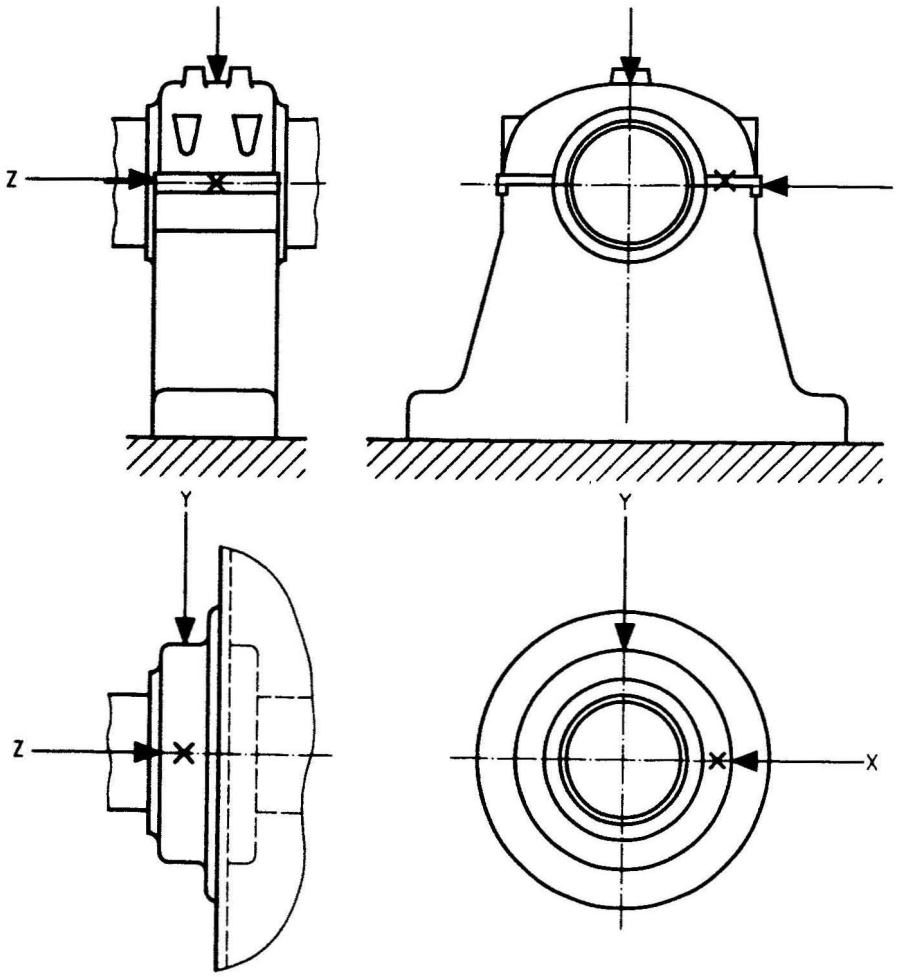

NOTE Evaluation criteria in this part of ISO 10816 apply to radial vibration measurements on all bearings and to axial vibration measurements on thrust bearings.

Figure 1 — Recommended locations of vibration measurements on bearings

A single radial transducer may be used on a bearing in place of the more typical pair of orthogonal transducers if it is known to provide adequate information on the magnitude of the machine vibration. In general, however, caution should be observed in evaluating vibration from a single transducer at a measurement plane since it may not be oriented to provide a reasonable approximation of the maximum value at that plane.

It is not common practice to measure axial vibration on main radial load-carrying bearings of steam turbines and generators for continuous operational monitoring. Such axial measurements are used primarily during periodic vibration surveys, or for diagnostic purposes. Axial vibration criteria are not provided in this part of ISO 10816. However, when axial vibration is measured at thrust bearings, the severity may be judged using the same criteria as for radial vibration.

4 Evaluation criteria

4.1 General

ISO 10816-1 provides a general description of the two evaluation criteria used to assess vibration severity on various classes of machines. One criterion considers the magnitude of observed broad-band vibration; the second considers changes in magnitude, irrespective of whether they are increases or decreases.

Criteria are presented for steady-state operating conditions at the specified rated speed and load ranges, including the normal slow changes in electrical load of the generator. Alternative values of vibration magnitude are also provided for transient operation.

4.2 Criterion I: Vibration magnitude

4.2.1 General

This criterion is concerned with defining limits for absolute vibration magnitude consistent with acceptable dynamic loads on the bearings and acceptable vibration transmission into the support structure and foundation.

4.2.2 Vibration magnitude at rated speed under normal steady-state operating conditions

4.2.2.1 General

The maximum vibration magnitude observed at each bearing or pedestal is assessed against four evaluation zones established from international experience. The maximum magnitude of vibration measured is defined as the vibration severity.

4.2.2.2 Evaluation zones

The following evaluation zones are defined to permit a qualitative assessment of the vibration of a given machine and to provide guidelines on possible actions.

Zone A: The vibration of newly commissioned machines would normally fall within this zone.

Zone B: Machines with vibration within this zone are normally considered acceptable for unrestricted long-term operation.

Zone C: Machines with vibration within this zone are normally considered unsatisfactory for long-term continuous operation. Generally, the machine may be operated for a limited period in this condition until a suitable opportunity arises for remedial action.

Zone D: Vibration values within this zone are normally considered to be of sufficient severity to cause damage to the machine.

NOTE The evaluation zones defined above are relevant to normal steady-state operation at rated speed. Subclause 4.2.4 provides guidelines for transient operation.

4.2.2.3 Evaluation zone boundaries

Recommended values for the zone boundaries are given in annex A. They apply to radial vibration measurements on all bearings and to axial vibration measurements on thrust bearings when taken under steady-state operating conditions at rated speed. The zone boundary values were established from representative data provided by manufacturers and users. Since the data show significant spread, the zone boundary values should be considered only as guidelines. They are not intended to serve as acceptance specifications, which shall be subject to agreement between the machine manufacturer and customer. However, these values provide guidelines for ensuring that gross deficiencies or unrealistic requirements are avoided.

In most cases the values given in Table A.1 are consistent with ensuring that the dynamic loads transmitted to the bearing support structure and foundation are acceptable. However, in certain cases, specific features or available experience associated with a particular machine type may require different zone boundaries to be used (lower or higher). Examples are as follows.

a) For comparatively lightly loaded bearings (e.g. exciter rotor steady bearings) or other more flexible bearings, other criteria based on the detailed machine design may be necessary.

b) For some machine designs, where the rotor and bearings are supported on a compliant base/support structure, the magnitudes of (absolute) bearing vibration might be higher than those for steam turbines and generators that have more rigid bearing support structures. It may then be acceptable, based on demonstrated satisfactory operating history, for the zone boundary values given in annex A to be increased.

See also 4.2.3.2 and annex B with regard to setting limits for machines having bearings with different support stiffness.

In general when higher zone boundary values are used, it might be necessary for technical justification to be provided to confirm that the machine reliability will not be compromized by operating with higher vibration magnitudes. This could be based, for example, on successful operating experience with machines of similar structural design and support. Higher values may also be tolerated during transient conditions, such as run up and run down (see 4.2.4).

This part of ISO 10816 does not provide different evaluation zone values for steam turbines and generators mounted on rigid and flexible foundations. This is consistent with ISO 7919-2 which deals with shaft vibration for the same class of machines. However, this part of ISO 10816 and ISO 7919-2 might be revised in the future to give different criteria for steam turbines and generators mounted on massive concrete foundations and those mounted on lighter, tuned steel foundations, if additional analysis of survey data on such machines shows this to be warranted.

The common measurement parameter for assessing machine vibration severity is velocity. Table A.1 presents the evaluation zone boundaries based on broad-band r.m.s. (root-mean-square) velocity measurements. In many cases, however, it was customary to measure vibration with instruments scaled to read peak rather than r.m.s. vibration velocity values. If the vibration wave form is basically sinusoidal, a simple relationship exists between the peak and r.m.s. values and the zone boundaries of Table A.1 may be readily expressed in peak values.

For steam turbines and generators, it is common for the vibration to be predominantly at the running frequency of the machine. For such cases and when peak rather than r.m.s. values of vibration are being measured, a table equivalent to Table A.1 can be constructed. The zone boundaries of Table A.1 are multiplied by a factor of $\sqrt{2}$ to produce such an equivalent table for assessing peak vibration severity. Alternatively, the measured peak vibration values may be divided by $\sqrt{2}$ and judged against the r.m.s. criteria of Table A.1.

A different factor may be required if instrumentation measuring true peak values is used.

4.2.3 Operational limits for steady-state operation

4.2.3.1 General

For long-term steady-state operation, it is common practice to establish operational vibration limits. These limits take the form of ALARMS and TRIPS.

ALARMS: To provide a warning that a defined value of vibration has been reached or a significant change has occurred, at which remedial action may be necessary. In general, if an ALARM situation occurs, operation can continue for a period whilst investigations are carried out to identify the reason for the change in vibration and define any remedial action.

TRIPS: To specify the magnitude of vibration beyond which further operation of the machine may cause damage. If the TRIP value is exceeded, immediate action should be taken to reduce the vibration or the machine should be shut down.

Different operational limits, reflecting differences in dynamic loading and support stiffness, may be specified for different measurement positions and directions.

4.2.3.2 Setting of ALARMS

The ALARM values may vary for individual machines. The values chosen will normally be set relative to a baseline value determined from experience for the measurement position or direction for that particular machine.

It is recommended that the ALARM value be set higher than the baseline by an amount equal to 25 % of the zone boundary B/C. If the baseline is low, the ALARM may be below zone C (see the example in annex B).

Where there is no established baseline (for example with a new machine) the initial ALARM setting should be based either on experience with other similar machines or relative to agreed acceptance values. After a period of time, the steady-state baseline value will be established and the ALARM setting should be adjusted accordingly.

Where the baseline signal is non-steady and non-repetitive, some method of time averaging of the signal is required. This could be achieved with the aid of a computer.

It is recommended that the ALARM value should not normally exceed 1,25 times the zone boundary B/C.

f the steady-state baseline changes (for example after a machine overhaul), the ALARM setting should be revised accordingly. Different operational ALARM settings may then exist for different bearings on the machine, reflecting differences in dynamic loading and bearing support stiffnesses.

An example of establishing ALARM values is given in annex B.

4.2.3.3 Setting of TRIPS

The TRIP values will generally relate to the mechanical integrity of the machine and be dependent on any specific design features which have been introduced to enable the machine to withstand abnormal dynamic forces. The values used will, therefore, generally be the same for all machines of similar design and would not normally be related to the steady-state baseline value used for setting ALARMS.

There may, however, be differences for machines of different design and it is not possible to give more precise guidelines for absolute TRIP values. In general, the TRIP value will be within zone C or D, but it is recommended that the TRIP value should not exceed 1,25 times the zone boundary C/D.

4.2.4 Vibration magnitude during transient operation

4.2.4.1 General

The vibration values given in annex A are specified with regard to the long-term operation of the steam turbine and/or generator at the specified steady-state operating conditions. Higher values of vibration can be tolerated during transient operation. This includes both transient operation at rated speed and during run up or run down, particularly when passing through resonant speed ranges. The higher values allowed for transient operation may exceed the ALARM values specified in 4.2.3.

As with the steady-state vibration, any acceptance values for specific cases shall be subject to agreement between the machine manufacturer and customer. However, guidelines are given below which should ensure that gross deficiencies or unrealistic requirements are avoided.

4.2.4.2 Vibration magnitude during transient operation at rated speed

This includes operation at no load following synchronization, rapid load or power factor changes and any other operational conditions of relatively short duration. For such transient conditions, the vibration magnitude shall normally be considered to be acceptable provided that it does not exceed the zone boundary C/D.

4.2.4.3 Vibration magnitude during run up, run down and overspeed

The specification of vibration limits during run up, run down and overspeed may vary depending on particular machine constructional features, or the specific operational requirements. For example, higher vibration values may be acceptable for a base load unit for which there may be only a small number of starts, whereas more stringent limits may apply for a unit which undergoes regular two-shift operation and may be subject to specific time constraints for achieving guaranteed output levels. Furthermore, the vibration magnitude when passing through resonant speeds during run up and run down will be strongly influenced by the damping and the rate of change of speed. For example, as the rate of change of speed is generally lower during run down than run up, higher vibration values may be experienced when passing through resonant speeds during run down (see also ISO 10814 for further information about the sensitivity of machines to unbalance).

In this part of ISO 10816 it is only possible to provide general guidelines which can be used if there are no established baseline values available for similar machines (see also annex B). The guideline is that the allowable pedestal vibration velocity to prevent damaging levels of vibration from being experienced during run up, run down or overspeed should not exceed the zone boundary C/D. It should also be noted that the specification of a single value of pedestal vibration velocity during run up or run down would lead to unacceptably high vibration displacements at low speed. In such cases it may be necessary to define alternative low-speed criteria.

This relationship is shown in graphical form in Figure 2.

The maximum values will normally occur during passage through resonant speed ranges. In order to avoid excessive vibration it is recommended that, where possible, the vibration should be assessed before a resonant speed is reached and compared with typical vibration vectors obtained under the same conditions during previous satisfactory runs. If any significant differences are observed, it may be advisable to take further action before proceeding (for example, hold speed until the vibration stabilizes or returns to previous values, carry out a more detailed investigation or check operational parameters).

As is the case for vibration measured under normal steady-state operating conditions, any ALARM values during run up, run down and overspeed should normally be set relative to the corresponding baseline values determined from experience during run up, run down or overspeed for the particular machine.

It is recommended that the ALARM value during run up, run down and overspeed should be set above the baseline value by an amount equal to 25 % of the zone boundary B/C. In those cases where no reliable baseline data are available, it is recommended that the maximum ALARM value should be not greater than the zone boundary C/D.

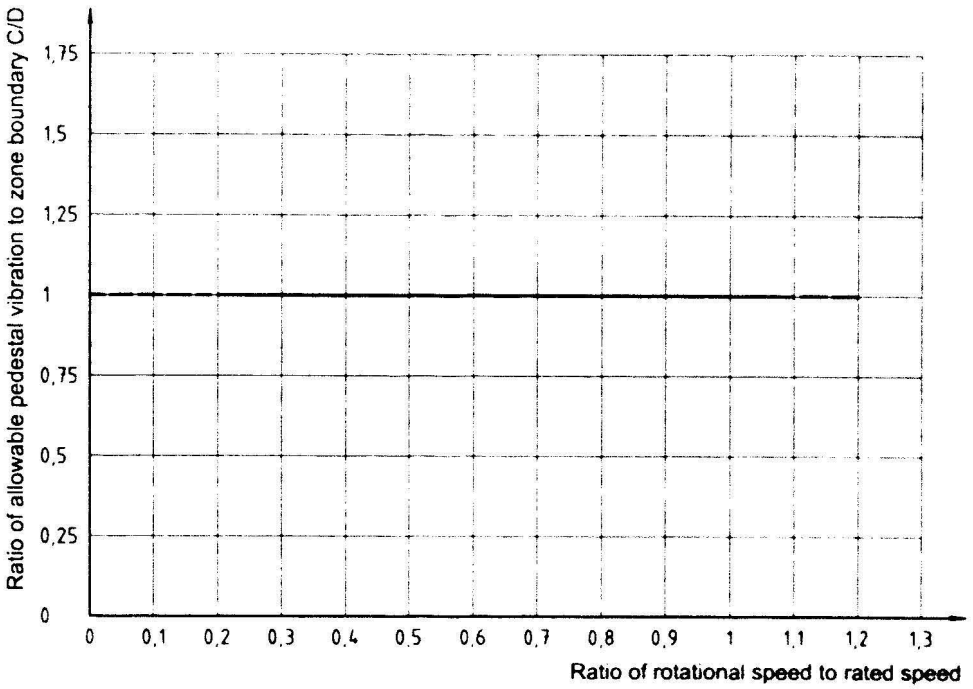

Figure 2 — Allowable pedestal vibration during run up, run down and overspeed

In most cases it is not normal practice to define TRIP settings during run up, run down and overspeed. For example, if excessive vibrations build up during run up it may be more appropriate to reduce speed rather than to initiate a TRIP. On the other hand there is little point in initiating a high-vibration TRIP during run down since this will not change the action (i.e. to run down) which has already been taken.

4.3 Criterion II: Change in vibration magnitude

This criterion provides an assessment of a change in vibration magnitude from a previously established baseline value. A significant increase or decrease in broad-band vibration magnitude can occur which requires some action even though zone C of Criterion I has not been reached. Such changes can be instantaneous or progressive with time, and may indicate that damage has occurred or be a warning of an impending failure or some other irregularity. Criterion II is specified on the basis of the change in broad-band vibration magnitude occurring under steady-state operating conditions. Such conditions allow for small changes in the generator power output at the normal operating speed.

When Criterion II is applied, the vibration measurements being compared shall be taken at the same transducer location and orientation, and under approximately the same machine operating conditions. Significant changes from the normal vibration magnitudes should be investigated so that a dangerous situation can be avoided. If the vibration magnitude changes by a significant amount (typically 25 % of the zone boundary B/C), regardless of whether this increases or decreases the magnitude of vibration, steps should be taken to ascertain the reason for the change. Diagnostic investigations should then be initiated to ascertain the reason for the change and to determine what further actions are appropriate.

The 25 % value is provided as a guideline for a significant change in vibration magnitude, but other values may be used based on experience with a specific machine.

4.4 Supplementary procedures/criteria

The measurement and evaluation of vibration given in this part of ISO 10816 may be supplemented or replaced by shaft vibration measurements and the applicable criteria given in ISO 7919-2. It is important to recognize that there is no simple way to relate bearing vibration to shaft vibration, or vice versa. The difference between the shaft absolute and shaft relative measurements is related to the bearing vibration but might not be numerically equal to it because of phase angle differences. Thus, when the criteria of this part of ISO 10816 and those of ISO 7919-2 are both applied in the assessment of machine vibration, independent shaft and bearing vibration measurements shall be made. If the application of the different criteria leads to different assessments of vibration severity, the more restrictive classification generally applies.

4.5 Evaluation based on vibration vector information

The evaluation considered in this part of ISO 10816 is limited to broad-band vibration without reference to frequency components or phase. This will, in most cases, be adequate for acceptance testing and for operational monitoring purposes. However, for long-term condition monitoring purposes and for diagnostics, the use of vibration vector information is particularly useful for detecting and defining changes in the dynamic state of the machine. In some cases these changes would go undetected when using only broad-band vibration measurements (see, for example, ISO 10816-1).

Phase- and frequency-related vibration information is being used increasingly for condition monitoring and diagnostic purposes. The specification of criteria for this, however, is beyond the present scope of this part of ISO 10816.

Annex A
(normative)

Evaluation zone boundaries

In most cases the values given in Table A.1 are consistent with ensuring satisfactory operation. However, in certain cases, specific features associated with a particular machine type might require different zone boundary values to be used (see 4.2.2.3).

Table A.1 — Recommended values for bearing housing/pedestal vibration velocity for steam turbines and generators at the zone boundaries

Zone boundary	Shaft rotational speed r/min	
	1 500 or 1 800	3 000 or 3 600
	R.m.s. vibration velocity mm/s	
A/B	2,8	3,8
B/C	5,3	7,5
C/D	8,5	11,8

NOTE 1 These values relate to steady-state operating conditions at rated speed for the recommended measurement locations (see Figure 1). They apply to radial vibration measurements on all bearings and to axial vibration measurements on thrust bearings.

NOTE 2 These values are valid for steam turbines and generators mounted on rigid and flexible foundations. However, in general, vibration magnitudes observed on machines on massive concrete foundations are lower than those for machines with more flexible foundations.

Annex B
(informative)

Example of setting ALARM and TRIP values

Consider the case of a 3 000 r/min large steam turbine generator set. The operational ALARM settings for a new machine for which there is no prior knowledge of bearing vibration is normally set within zone C. The specific value is often set by mutual agreement between the customer and machine manufacturer. For this example, assume it has been set initially near the zone boundary B/C for each bearing, for example to an r.m.s. value of 8,0 mm/s.

After a period of machine operation, the customer may consider the option of changing the ALARM settings to reflect the typical steady baseline values of vibration at each bearing. Using the procedure described in 4.2.3.2 as the basis, the ALARM may be set for each bearing to equal the sum of the typical steady-state value obtained from experience with the specific machine, and 25 % of the zone boundary B/C. Hence, if the typical steady-state r.m.s. value at one bearing is 4,0 mm/s, a new ALARM setting of 5,9 mm/s (i.e. 4,0 mm/s + 0,25 × 7,5 mm/s) (see Table A.1) may be used that is within zone B. If on another bearing the typical value is 6,0 mm/s, application of the procedure of 4.2.3.2 for this second bearing would result in a value of 7,9 mm/s. The difference between this and the initial value is insignificant and therefore the ALARM value would probably remain unchanged, within zone C.

For either bearing, however, the machine TRIP value would remain at an r.m.s. value of 11,8 mm/s in accordance with Criterion I. The basis for this is that the TRIP value is a fixed value corresponding to the maximum vibration to which the machine should be subjected.

Bibliography

[1] ISO 2954, *Mechanical vibration of rotating and reciprocating machinery — Requirements for instruments for measuring vibration severity*

[2] ISO 7919-1, *Mechanical vibration — Evaluation of machine vibration by measurements on rotating shafts — Part 1: General guidelines*

[3] ISO 7919-3, *Mechanical vibration — Evaluation of machine vibration by measurements on rotating shafts — Part 3: Coupled industrial machines*

[4] ISO 7919-4, *Mechanical vibration — Evaluation of machine vibration by measurements on rotating shafts — Part 4: Gas turbine sets*

[5] ISO 10814, *Mechanical vibration — Susceptibility and sensitivity of machines to unbalance*

[6] ISO 10816-3, *Mechanical vibration — Evaluation of machine vibration by measurements on non-rotating parts — Part 3: Industrial machines with nominal power above 15 kW and nominal speeds between 120 r/min and 15 000 r/min when measured in situ*

[7] ISO 10816-4, *Mechanical vibration — Evaluation of machine vibration by measurements on non-rotating parts — Part 4: Gas turbine driven sets excluding aircraft derivatives*

[8] ISO 13373-1, *Condition monitoring and diagnostics of machines — Vibration condition monitoring — Part 1: General procedures*

Bureau of Indian Standards

BIS is a statutory institution established under the *Bureau of Indian Standards Act*, 1986 to promote harmonious development of the activities of standardization, marking and quality certification of goods and attending to connected matters in the country.

Copyright

BIS has the copyright of all its publications. No part of these publications may be reproduced in any form without the prior permission in writing of BIS. This does not preclude the free use, in the course of implementing the standard, of necessary details, such as symbols and sizes, type or grade designations. Enquiries relating to copyright be addressed to the Director (Publications), BIS.

Review of Indian Standards

Amendments are issued to standards as the need arises on the basis of comments. Standards are also reviewed periodically; a standard along with amendments is reaffirmed when such review indicates that no changes are needed; if the review indicates that changes are needed, it is taken up for revision. Users of Indian Standards should ascertain that they are in possession of the latest amendments or edition by referring to the latest issue of 'BIS Catalogue' and 'Standards: Monthly Additions'.

This Indian Standard has been developed from Doc: No. MED 28 (0913).

Amendments Issued Since Publication

Amend No.	Date of Issue	Text Affected

BUREAU OF INDIAN STANDARDS

Headquarters:

Manak Bhavan, 9 Bahadur Shah Zafar Marg, New Delhi 110002
Telephones: 2323 0131, 2323 3375, 2323 9402 *website* : www.bis.org.in

Regional Offices:		Telephones
Central	: Manak Bhavan, 9 Bahadur Shah Zafar Marg NEW DELHI 110002	2323 7617, 2323 3841
Eastern	: 1/14 C.I.T. Scheme VII M, V.I.P. Road, Kankurgachi KOLKATA 700054	2337 8499, 2337 8561, 2337 8626, 2337 9120
Northern	: SCO 335-336, Sector 34-A, CHANDIGARH 160022	260 3843, 260 9285
Southern	: C.I.T. Campus, IV Cross Road, CHENNAI 600113	2254 1216, 2254 1442, 2254 2519, 2254 2315
Western	: Manakalaya, E9 MIDC, Marol, Andheri (East) MUMBAI 400093	2832 9295, 2832 7858, 2832 7891, 2832 7892

Branches: AHMEDABAD. BANGALORE. BHOPAL. BHUBANESHWAR. COIMBATORE. FARIDABAD. GHAZIABAD. GUWAHATI. HYDERABAD. JAIPUR. KANPUR. LUCKNOW. NAGPUR. PARWANOO. PATNA. PUNE. RAJKOT. THIRUVANANTHAPURAM. VISAKHAPATNAM.

Printed at Simco Printing Press, Delhi